COUNTY OF SAN JOAQUIN

DEPARTMENT OF PUBLIC WORKS
P.0. BOX 1810-1810 E. HAZELTON AVENUE
STOCKTON, CALIFORNIA 95201
(209) 468-3000
FAX # (209) 468-9324

Permit No: **PS-1502063**
Date Issued: 08/25/2015
Exp. Date: 08/24/2016

Project No: PWP110005
APN No: 22905027

DRIVEWAY ENCROACHMENT PERMIT

To: MIKE SMITH CCPS
PO BOX 3814
MERCED CA 95344

Location: N/S ARTHUR RD 300' E/O SEXTON RD

In compliance with your request of **07/27/2015**, and subject to all the terms, conditions and restrictions written below or printed as general or special provisions on any part of this form.
Permission is hereby granted to construct One driveway w/o pipe shown on
Permit Application No. PS-1502063 Quad: SE

Jobsite shall be kept in a safe condition at all times by removing daily any excess dirt or debris which might be a hazard to pedestrian and/or vehicular traffic. Adequate lights, signs and barricades shall be placed and maintained by the Permittee for the protection of the public in accordance with the current Caltrans Standard Specifications.

A(n) ( ) inside diameter per section 62 of the current Caltrans Standard Specifications, ALTERNATIVE PIPE AND PIPE ARCH CULVERTS, shall be installed in roadside drainage ditch for drainage flow maintenance and shall be of sufficient length to clear toe of approach fill or headwalls.

The entire area of driveway approach(es), include flares for turning and /or paved frontage(s), from the edge of roadway pavement to right-of-way (front property) line shall be surfaced with a two inch (2") minimum of asphalt concrete over a (4 inch) Four inch minimum of compacted layer of three-quarter inch (3/4") maximum size aggregate base material (road gravel) conforming to Class 2 Aggregate Base specified in Section 26 of the current Caltrans Standard Specification, or with a four inch (4") minimum of portland cement concrete.

If portland cement concrete pavement is installed, expansion joints shall be provided at the edge of pavement and along property line. Surface grades of approach(es) and/or to open ends of pipe. No ponding or puddles on pavement surface shall be allowed.

The field Engineering Division of this office shall receive no less than forty-eight(48) hours notice prior to beginning of any work within the County right-of-way. After completion of the work permitted herein, all debris, lumber, barricades or any excess material shall be removed and the jobsite left in a neat workmanlike condition. The Permittee shall fill out and mail notice of completion provided by Grantor.

Driveway(s) shall be complete prior to occupancy of the residence, but not to exceed expiration date.

Mike Selling, Deputy Director
Department of Public Works

By _____
Permit section

FORMS: SS/WW,R-29

ENCROACHMENT PERMIT GENERAL PROVISIONS

13-1

1. This permit is issued under and subject to all laws and ordinances of agencies governing the encroachment herein permitted. See the following references:
   STREETS AND HIGHWAYS CODE
   1. Division 1, Chapter 3
   2. Division 2, Chapter 2, Section 942
   3. Division 2, Chapter 4, Section 1126
   4. Division 2, Chapter 5.5 and Chapter 6

   SAN JOAQUIN COUNTY ORDINANCES NUMBERED: 324, 441, 648, 662, 672, 695, 700, 860, 892, 3359, and 3675.

2. It is understood and agreed by the Permittee that the performance of any work under this permit shall constitute an acceptance of all the provisions contained herein and failure on the Permittee's part to comply with any provision will be cause for revocation of this permit. Except as otherwise provided for public agencies and franchise holders, this permit is revocable on five days notice.

3. All work shall be done subject to the supervision of and the satisfaction of the grantor. The Permittee shall at all times during the progress of the work keep the County Highway in as neat and clean condition as is possible and upon completion of the work authorized herein, shall leave the County Highway in a thoroughly neat, clean and usable condition.

4. The Permittee also agrees by the acceptance of this permit to properly maintain any encroachment structure placed by the Permittee on any part of the County Highway and to immediately repair any damage to any portion of the highway, which occurs as a result of the maintenance of the said encroachment structure, until such time as the Permittee may be relieved of the responsibility for such maintenance by the County of San Joaquin.

5. The Permittee also agrees by the acceptance of this permit to make, at its own expense, such repairs as may be deemed necessary by the County Department of Public Works.

6. It is further agreed by the Permittee that whenever construction, reconstruction or maintenance work upon the highway is necessary, the installation provided for herein shall, upon request of the County Department of Public Works, be immediately moved or removed by and at the sole expense of the Permittee.

7. No material used for fill or backfill in the construction of the encroachment shall be borrowed or taken from within the County right of way.

8. All work shall be planned and carried out with as little inconvenience as possible to the traveling public. No material shall be stacked within eight feet (8') of the edge of the pavement or traveled way unless otherwise provided herein. Adequate provision shall be made for the protection of the traveling public. Traffic control standards shall be utilized including barricades; approved signs and lights; and flagmen, as required by the particular work in progress.

9. The Permittee, by the acceptance of this permit, shall assume full responsibility for all liability for personal injury or damage to property which may arise out of the work herein permitted or which may arise out of the failure of the part of the Permittee to properly perform the work provided under this permit. In the event any claim of such liability is made against the County of San Joaquin or any department, official or employee thereof, the Permittee shall defend, indemnify, and hold each of them harmless for such claim.

10. All backfill material is to be moistened as necessary and thoroughly compacted with mechanical means. If required by the County Director of Public Works, such backfill shall consist of gravel or crushed rock. The Permittee shall maintain the surface over structures placed hereunder as may be necessary to insure the return of the roadway to a completely stable condition and until relieved of such responsibility by the County Department of Public Works. Wherever a gravel, crushed rock or asphalt surface is removed or damaged in the course of work related to the permitted encroachment, such material shall either be separately stored and replaced in the roadway as nearly as possible in its original state or shall be replaced in kind, and the roadway shall be left in at least as good a condition as it was before the commencement of operations of placing the encroachment structure.

11. Whenever it becomes necessary to secure permission from abutting property owners for the proposed work, such authority must be secured by the Permittee prior to starting work.

12. The current and future safety and convenience of the traveling public shall be given every consideration in the location and methods of construction utilized.

13. The Permittee is responsible for the preservation of survey monuments within the work herein permitted. If any are disturbed, the Permittee is required to tie out each location and re-establish them after completion of work, using a licensed land surveyor. A corner record must be filed in accordance with state law for any re-set monuments.

COUNTY OF SAN JOAQUIN
DEPARTMENT OF PULIC WORKS

Date: 7-27

Received By: T C

CR#: 54457

DRIVEWAYS AND PAVED FRONTAGES PERMIT APPLICATION

APPLICANT	
Name:	MIKE SMITH CCPS
Address:	P.O. BOX 3814
City, State, Zip Code:	MERCED, CA. 95344
Area Code - Telephone Number:	209-628-0206

Mail to: ~~SITE INFORMATION~~

Parcel Owner's Name:	CALEB COX
Site Address:	477 VALDAPONA WAY
City, State, Zip Code:	ESCALON, CA. 95320
Area Code - Telephone Number:	209-247-8730

CONTRACTOR	
Name:	
Address:	
City, State, Zip Code:	
Area Code - Telephone Number:	

OFFICE USE ONLY			
JOB #:	11005	ISSUE DATE:	
APN	229 050 27	FEE DUE:	
EXP. DATE:		DRIVEWAYS:	
STREET:	Arthur		*
AREA:	Escalon	QUAD SE	*
TYPE:	DW		*
FORMS:	SSWW R17		
NOTES:			

DRIVEWAY

TYPE:	QUANTITY	WIDTHS
AGRICULTURE:		@FRONTAGE
COMMERCIAL:		
INDUSTRIAL:		@ R/W
RESIDENCE:	1	

PAVED FRONTAGE

LENGTH: Ft. X WIDTH: Ft.

The undersigned hereby applies for permission to excavate, construct and/or otherwise encroach on County Highway Right-of-Way on the N side of Arthur approximately 300' feet/mile E of Sexton, by installing

22555 E. Arthur RD. (ESCALON)

Work will commence on or about _____ for approximately _____ days.

SKETCH (Separate sheet may be submitted)

Will this project be self-installed? ✓ YES ____ NO Contractor's License _____

THE APPLICANT HEREBY CERTIFIES:

1. That he/she has read all the provisions of this application, and that the description included in this application are correct to the best of his/her knowledge; and

2. That he/she is the owner of the respective property, or is qualified to represent the owner; and

3. That he/she will assume full responsibility for all liability for persona; injury or damage to property which may arise out of the work described above, or which may arise out of his/her failure to do the work provided herein; and

4. That in the event any claim of such liability is made against the County of San Joaquin or any department, official or employee thereof, he shall defend, indemnify and hold them and each of them harmless for such claim; and

5. That work shall be performed by the applicant and/or any representative of the application in the County Right-of-Way at the above indicated site with a valid San Joaquin County Encroachment Permit; and

6. That if permission is granted as requested, he agrees to do the work described in accordance with all terms, condition and restriction of this and any attached sheet, included as general or special III provisions.

Mike Smith — Signature of Applicant Title

7/27/2015 — Date

>>FIELD INSPECTION COMMENTS<<

229-5027

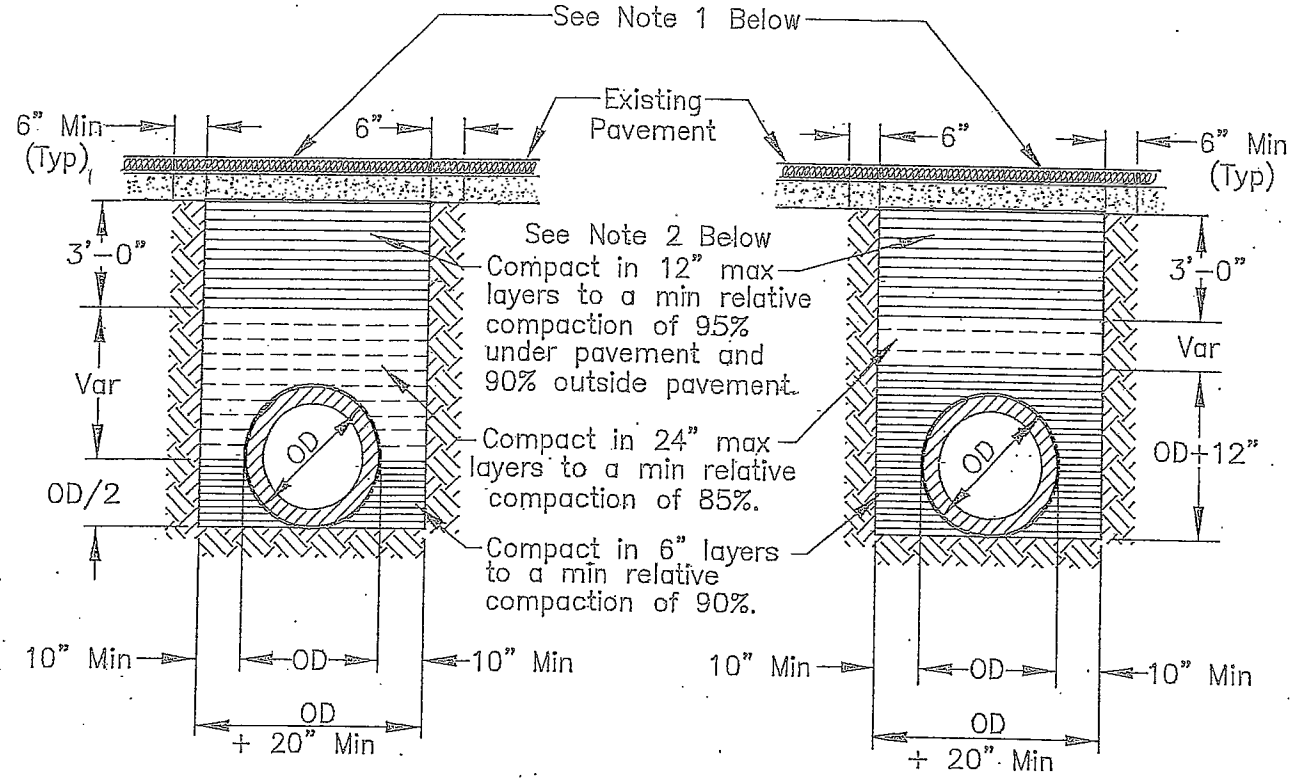

RIGID CONDUIT

FLEXIBLE CONDUIT

NOTES:

1. New pavement shall be 1" thicker than existing pavement, minimum of 0.25 Ft. New base shall be 1" thicker than existing base, min of 0.50 Ft.
2. Select native material or imported granular material as approved by the Director of Public Works. Backfill with materials equal to or better than the existing pavement and base in quality.
3. Relative compaction of materials shall be tested in accordance with the State of California, Dept. of Transportation Testing Manuals, test method No. California 216 or 231.
4. All existing pavement shall be neatly cut to line prior to trench excavation.
5. Jetting or ponding will be permitted within the street right-of-way with a 3 year bond, when approved by the Director of Public Works.
6. When shown by soil composition and compactability, ninety percent (90%) compaction may be used, when approved by the Director of Public Works.
7. Special bedding and backfill requirements may be shown on the plans or specified in the special provisions.

Public Works San Joaquin County
Working for YOU

TYIPCAL TRENCH BACKFILL

COUNTY OF SAN JOAQUIN
DEPARTMENT OF PUBLIC WORKS

Date: DEC 2014

Approved by: Thomas M. Flow

No.	Revision Description	Date

Std. Dwg. No. R-29